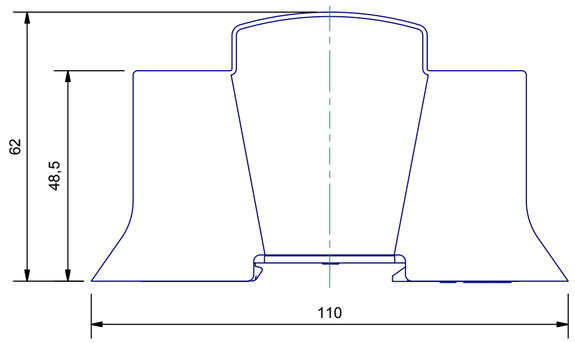

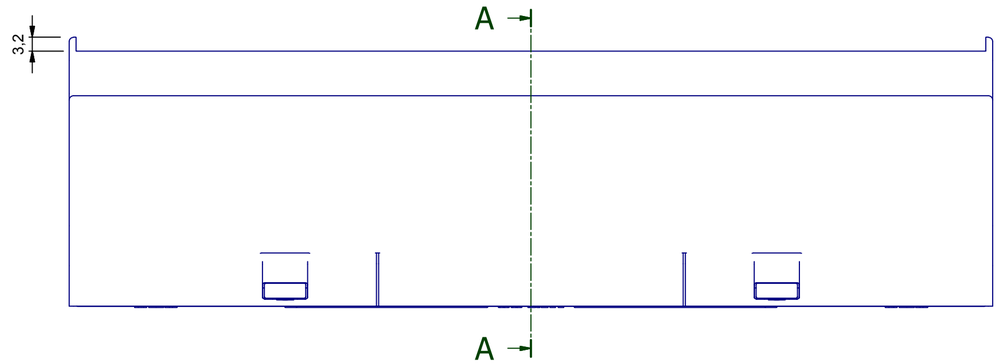

A-A (1 : 1)

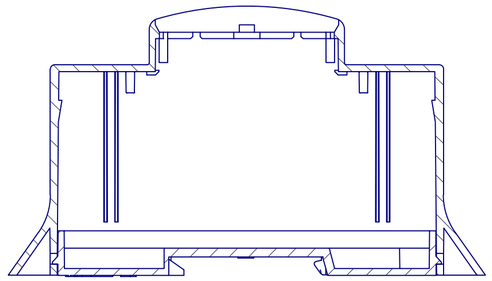

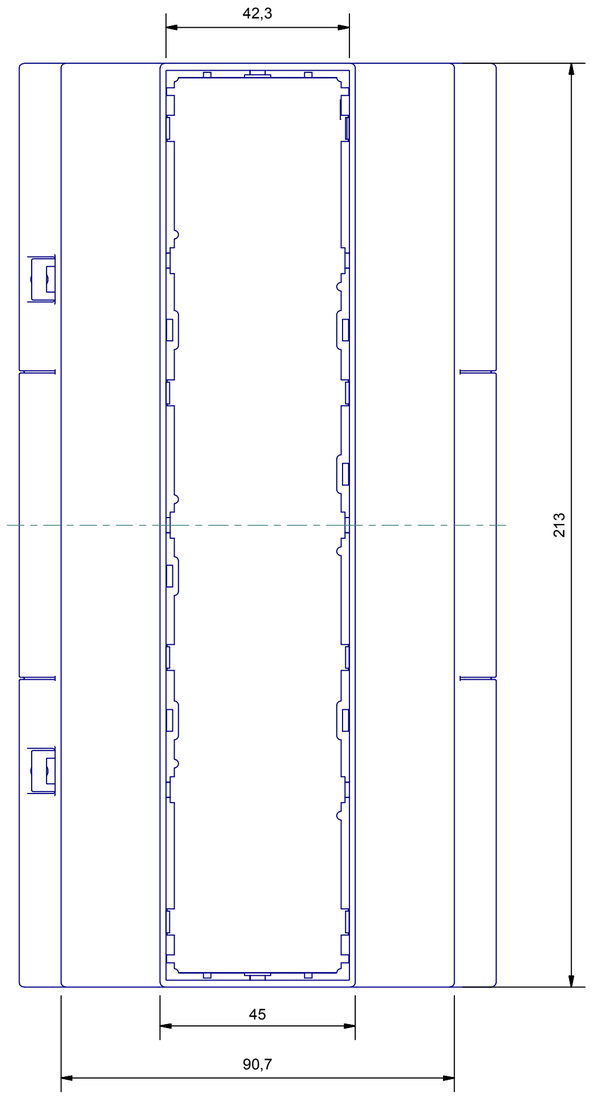

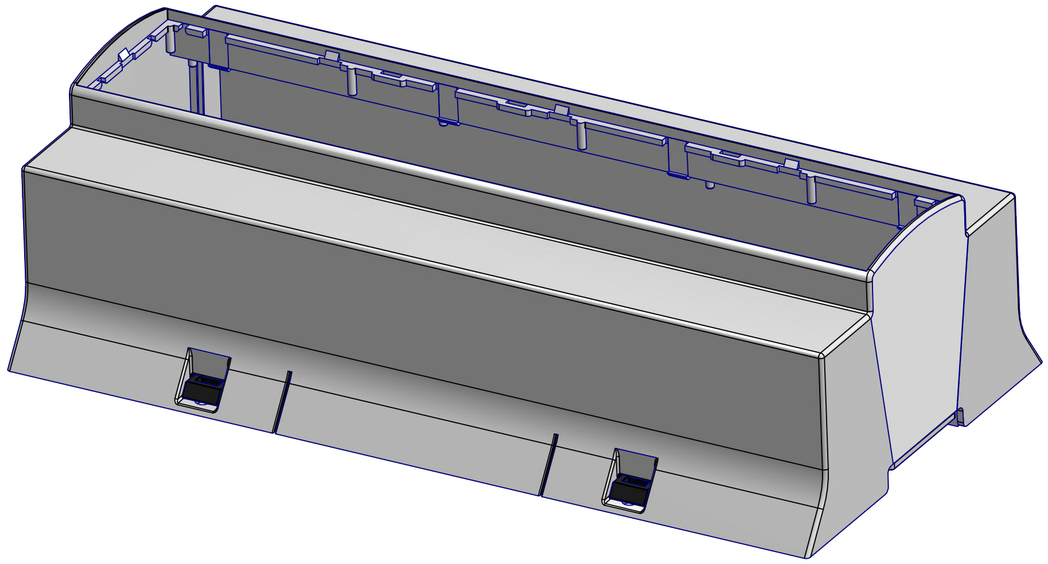

Da 0,5 a 3	Oltre 3 fino a 6	Oltre 6 fino a 30	Oltre 30 fino a 120	Oltre 120
± 0,1	± 0,1	± 0,2	± 0,3	± 0,5

RESERVED PROPERTY
The present drawing cannot be reproduced or comunicated to 3d parties, even partially, without the authorization of ITALTRONIC Srl. Italtronic reserves to protect its own rights according to the law.

Dimension in mm

SHEET NR. 1 / 1

DRAWING BY — Manual modification are not allowed

GENERAL TOLERANCE
UNI EN 22768/1
Media (m)

5	4	3	2	1

Revision description

Date: 31/08/2012

Replace nr.

Drawed: Reginato M.

Checked: Dalla Montà D.

Scale:

Denomination:

Contenitore completo modulbox XT 12M53-C

Complete enclosure modulbox XT 12M53-C

ITALTRONIC S.R.L.
VIA AUSTRIA 25/D 35127
PADOVA - ITALY
www.italtronic.com

Drawing nr.

M-04135-00